AC INDUCTIVE PROXIMITY SWITCH 5 WAY ROTATABLE SENSING

Q40	Q40	Q40
●	○	○
15 mm	20 mm	30 mm
PBT RESIN	PBT RESIN	PBT RESIN
●	●	●
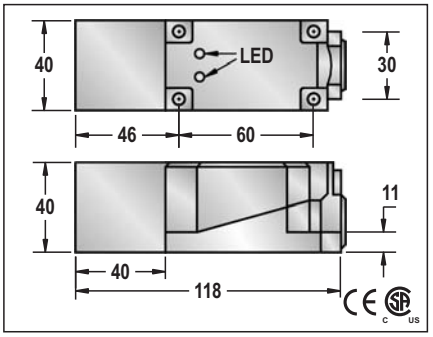	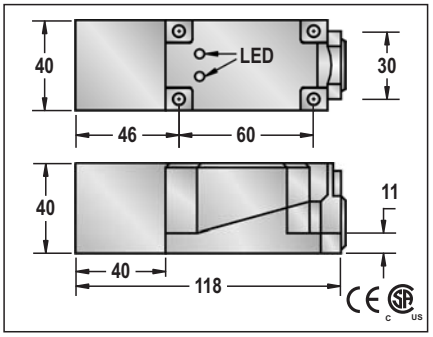	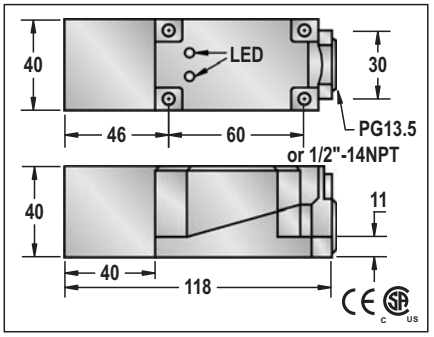
20-250VAC	20-250VAC	20-250VAC
-	-	-
<2.5mA	<2.5mA	<2.5mA
400mA	400mA	400mA
2.5mA	2.5mA	2.5mA
5A(20ms)	5A(20ms)	5A(20ms)
5mA	5mA	5mA
<8VAC AT 400MA	<8VAC AT 400MA	<8VAC AT 400MA
<25HZ	<25HZ	<25HZ
10ms/10ms	10ms/10ms	10ms/10ms
<15%(Sr)	<15%(Sr)	<15%(Sr)
<1.0%(Sr)	<1.0%(Sr)	<1.0%(Sr)
IP67	IP67	IP67
-25°C - +70°C	-25°C - +70°C	-25°C - +70°C
<10%(Sr)	<10%(Sr)	<10%(Sr)
-	-	-
-	-	-
-	-	-
RFI>3V/m / EFT>1KV / ESD>4KV (contact)	RFI>3V/m / EFT>1KV / ESD>4KV (contact)	RFI>3V/m / EFT>1KV / ESD>4KV (contact)
IEC 60947-5-2,Part 7.4.1 / IEC 60947-5-2,Part 7.4.2	IEC 60947-5-2,Part 7.4.1 / IEC 60947-5-2,Part 7.4.2	IEC 60947-5-2,Part 7.4.1 / IEC 60947-5-2,Part 7.4.2
PBT	PBT	PBT
FQP1-4015A-A2L 9	FQP2-4020A-A2L 9	FQP2-4030A-A2L 9
FQP1-4015A-B2L 10	FQP2-4020A-B2L 10	FQP2-4030A-B2L 10
FQP1-4015A-C4L 13	FQP2-4020A-C4L 13	FQP2-4030A-C4L 13
Approx.250 g	Approx.250 g	Approx.250 g

AC INDUCTIVE PROXIMITY SWITCH 5 WAY ROTATABLE SENSING

Q50		
○		
40 mm		
PBT RESIN		
●		
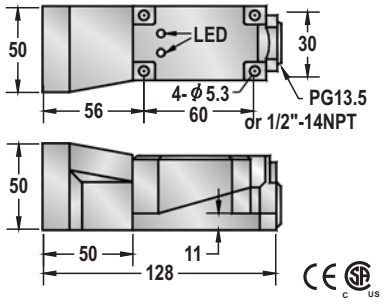		
20-250VAC		
-		
<2.5mA		
400mA		
2.5mA		
5A(20ms)		
5mA		
<8VAC AT 400MA		
<25HZ		
10ms/10ms		
<15%(Sr)		
<1.0%(Sr)		
IP67		
-25 ° C - +70 ° C		
<10%(Sr)		
-		
-		
-		
RFI>3V/m / EFT>1KV / ESD>4KV (contact)		
IEC 60947-5-2,Part 7.4.1 / IEC 60947-5-2,Part 7.4.2		
PBT		
FQP2-5040A-A2L	9	
FQP2-5040A-B2L	10	
FQP2-5040A-C4L	13	
Approx.250 g		

AC INDUCTIVE PROXIMITY SWITCH 5 WAY ROTATABLE SENSING

Q40	Q40	Q40
●	○	○
15 mm	20 mm	30 mm
PBT RESIN	PBT RESIN	PBT RESIN
●	●	●
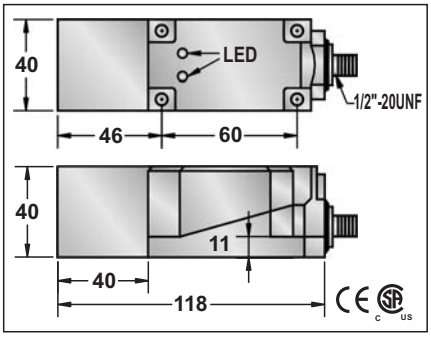	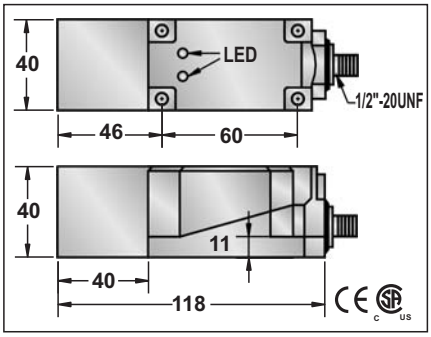	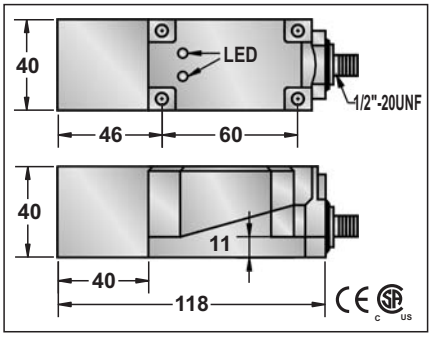
20-250VAC	20-250VAC	20-250VAC
-	-	-
<2.5mA	<2.5mA	<2.5mA
400mA	400mA	400mA
2.5mA	2.5mA	2.5mA
5A(20ms)	5A(20ms)	5A(20ms)
5mA	5mA	5mA
<8VAC AT 400MA	<8VAC AT 400MA	<8VAC AT 400MA
<25HZ	<25HZ	<25HZ
10ms/10ms	10ms/10ms	10ms/10ms
<15%	<15%	<15%
<1.0%(Sr)	<1.0%(Sr)	<1.0%(Sr)
IP67	IP67	IP67
-25 °C - +70 °C	-25 °C - +70 °C	-25 °C - +70 °C
<10%(Sr)	<10%(Sr)	<10%(Sr)
-	-	-
-	-	-
-	-	-
RFI>3V/m / EFT>1KV / ESD>4KV (contact)	RFI>3V/m / EFT>1KV / ESD>4KV (contact)	RFI>3V/m / EFT>1KV / ESD>4KV (contact)
IEC 60947-5-2,Part 7.4.1 / IEC 60947-5-2,Part 7.4.2	IEC 60947-5-2,Part 7.4.1 / IEC 60947-5-2,Part 7.4.2	IEC 60947-5-2,Part 7.4.1 / IEC 60947-5-2,Part 7.4.2
PBT	PBT	PBT
FQP1-4015A-AUL3 58	FQP2-4020A-AUL3 58	FQP2-4030A-AUL3 58
FQP1-4015A-BUL3 58	FQP2-4020A-BUL3 58	FQP2-4030A-BUL3 58
FQP1-4015A-CUL5 62	FQP2-4020A-CUL5 62	FQP2-4030A-CUL5 62
Approx.250 g	Approx.250 g	Approx.250 g

AC INDUCTIVE PROXIMITY SWITCH 5 WAY ROTATABLE SENSING

Q40	Q40	Q40
●	○	○
15 mm	20 mm	30 mm
PBT RESIN	PBT RESIN	PBT RESIN
●	●	●
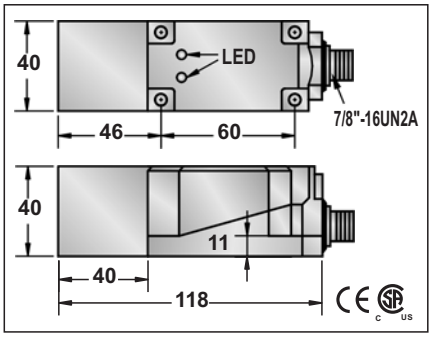	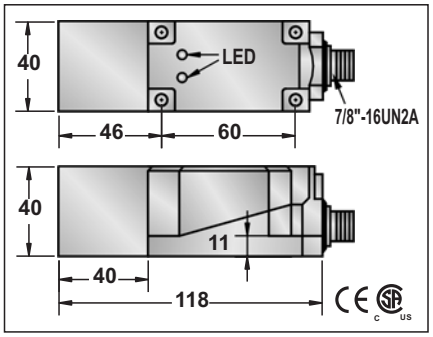	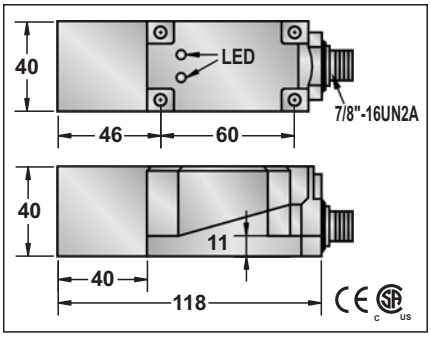
20-250VAC	20-250VAC	20-250VAC
-	-	-
<2.5mA	<2.5mA	<2.5mA
400mA	400mA	400mA
2.5mA	2.5mA	2.5mA
5A(20ms)	5A(20ms)	5A(20ms)
5mA	5mA	5mA
<8VAC AT 400MA	<8VAC AT 400MA	<8VAC AT 400MA
<25HZ	<25HZ	<25HZ
10ms/10ms	10ms/10ms	10ms/10ms
<15%(Sr)	<15%(Sr)	<15%(Sr)
<1.0%(Sr)	<1.0%(Sr)	<1.0%(Sr)
IP67	IP67	IP67
-25 °C - +70 °C	-25 °C - +70 °C	-25 °C - +70 °C
<10%(Sr)	<10%(Sr)	<10%(Sr)
-	-	-
-	-	-
-	-	-
RFI>3V/m / EFT>1KV / ESD>4KV (contact)	RFI>3V/m / EFT>1KV / ESD>4KV (contact)	RFI>3V/m / EFT>1KV / ESD>4KV (contact)
IEC 60947-5-2,Part 7.4.1 / IEC 60947-5-2,Part 7.4.2	IEC 60947-5-2,Part 7.4.1 / IEC 60947-5-2,Part 7.4.2	IEC 60947-5-2,Part 7.4.1 / IEC 60947-5-2,Part 7.4.2
PBT	PBT	PBT
FQP1-4015A-AZL2 66	FQP2-4020A-AZL2 66	FQP2-4030A-AZL2 66
FQP1-4015A-BZL2 66	FQP2-4020A-BZL2 66	FQP2-4030A-BZL2 66
FQP1-4015A-CZL4 69	FQP2-4020A-CZL4 69	FQP2-4030A-CZL4 69
Approx.250 g	Approx.250 g	Approx.250 g

AC INDUCTIVE PROXIMITY SWITCH 5 WAY ROTATABLE SENSING

Q50	Q50	Q40s
○	○	●
50 mm	50 mm	15 mm
PBT RESIN	PBT RESIN	PBT RESIN
●	●	●
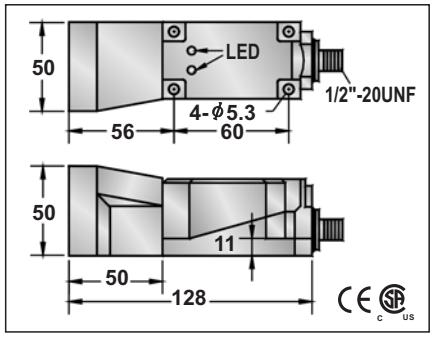	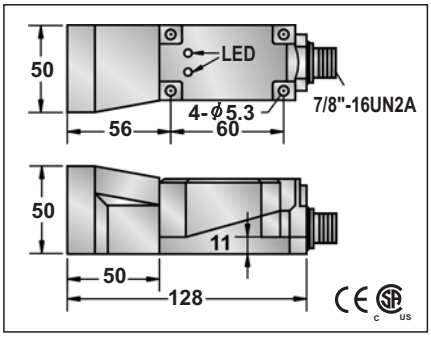	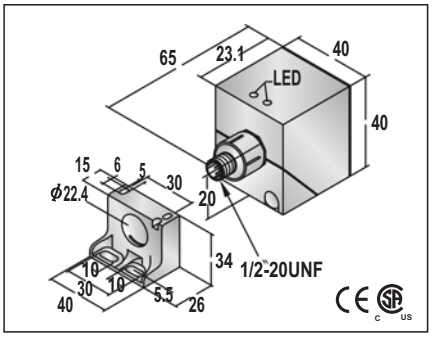
20-250VAC	20-250VAC	20-250VAC
-	-	-
<2.5mA	<2.5mA	<2.5mA
400mA	400mA	400mA
2.5mA	2.5mA	2.5mA
5A(20ms)	5A(20ms)	5A(20ms)
5mA	5mA	5mA
<8VAC AT 400MA	<8VAC AT 400MA	<8VAC AT 400MA
<25HZ	<25HZ	<25HZ
10ms/10ms	10ms/10ms	10ms/10ms
<15%(Sr)	<15%(Sr)	<15%(Sr)
<1.0%(Sr)	<1.0%(Sr)	<1.0%(Sr)
IP67	IP67	IP67
-25°C - +70°C	-25°C - +70°C	-25°C - +70°C
<10%(Sr)	<10%(Sr)	<10%(Sr)
-	-	-
-	-	-
-	-	-
RFI>3V/m / EFT>1KV / ESD>4KV (contact)	RFI>3V/m / EFT>1KV / ESD>4KV (contact)	RFI>3V/m / EFT>1KV / ESD>4KV (contact)
IEC 60947-5-2,Part 7.4.1 / IEC 60947-5-2,Part 7.4.2	IEC 60947-5-2,Part 7.4.1 / IEC 60947-5-2,Part 7.4.2	IEC 60947-5-2,Part 7.4.1 / IEC 60947-5-2,Part 7.4.2
PBT	PBT	PBT
FQP2-5040A-AUL3 58	FQP2-5040A-AZL2 66	FQP1-4015A-AUS3 58
FQP2-5040A-BUL3 58	FQP2-5040A-BZL2 66	FQP1-4015A-BUS3 58
FQP2-5040A-CUL5 62	FQP2-5040A-CZL4 69	FQP1-4015A-CUS5 62
Approx.250 g	Approx.250 g	Approx.250 g

AC INDUCTIVE PROXIMITY SWITCH 5 WAY ROTATABLE SENSING

Q40s		
●		
15 mm		
PBT RESIN		
●		

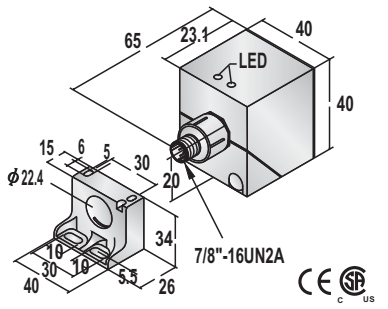

20-250VAC		
-		
<2.5mA		
400mA		
2.5mA		
5A(20ms)		
5mA		
<8VAC AT 400MA		
<25HZ		
10ms/10ms		
<15%(Sr)		
<1.0%(Sr)		
IP67		
-25 °C - +70 °C		
<10%(Sr)		
-		
-		
-		
RFI>3V/m / EFT>1KV / ESD>4KV (contact)		
IEC 60947-5-2,Part 7.4.1 / IEC 60947-5-2,Part 7.4.2		
PBT		

FQP1-4015A-AZS2	66		
FQP1-4015A-BZS2	66		
FQP1-4015A-CZS4	69		

Approx.250 g		